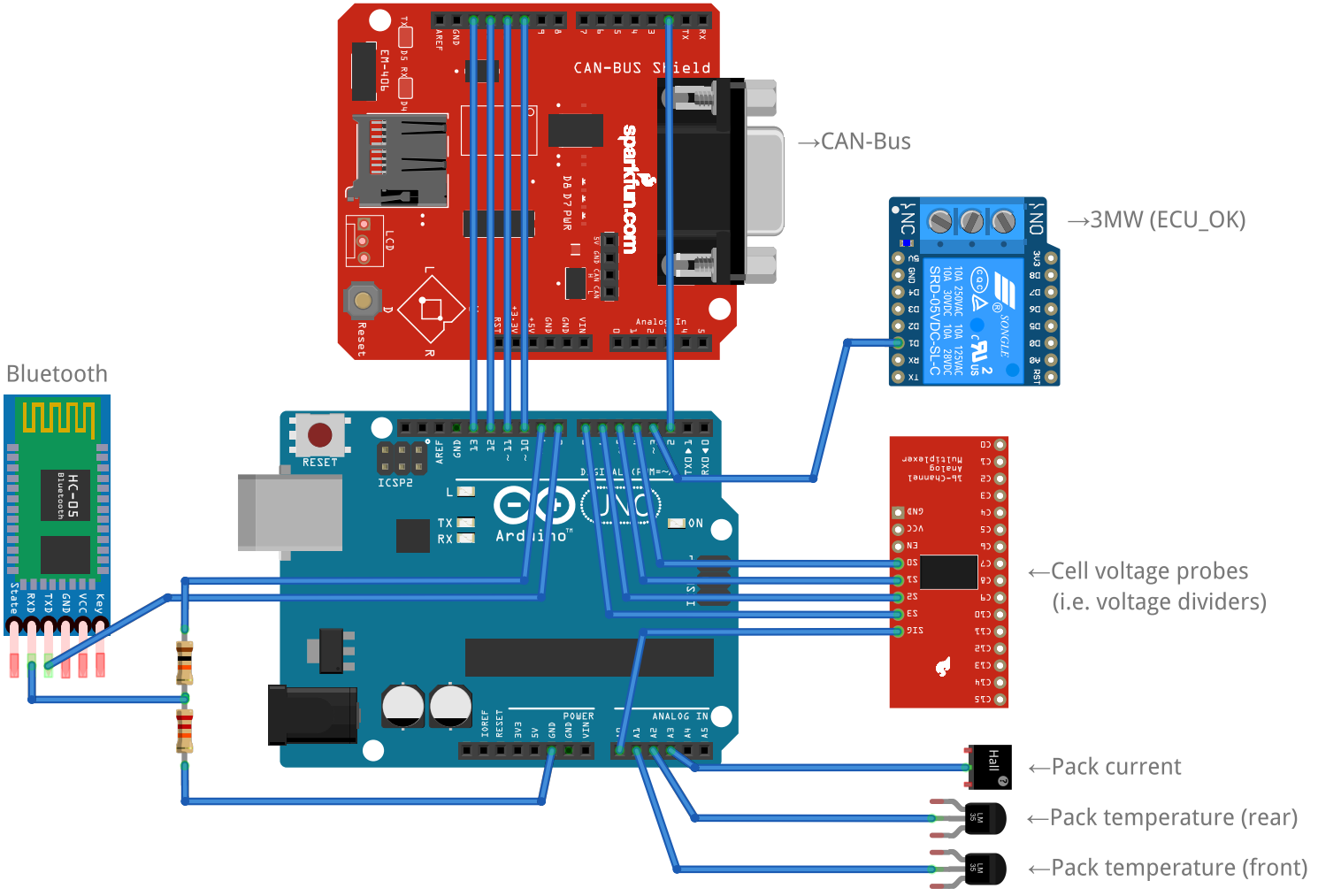
CAN-BUS Shield
sparkfun.com
→CAN-Bus
→3MW (ECU_OK)
Bluetooth
HC-05
Bluetooth
Arduino
RESET
ICSP2
←Cell voltage probes
(i.e. voltage dividers)
←Pack current
←Pack temperature (rear)
←Pack temperature (front)
fritzing